DocuSign Envelope ID: 832095E3-77B9-4CDD-9E5B-82E20FB0DBD3

PROJECT REFERENCE NO.	SHEET NO.
17BP.14.R.125	2C-9

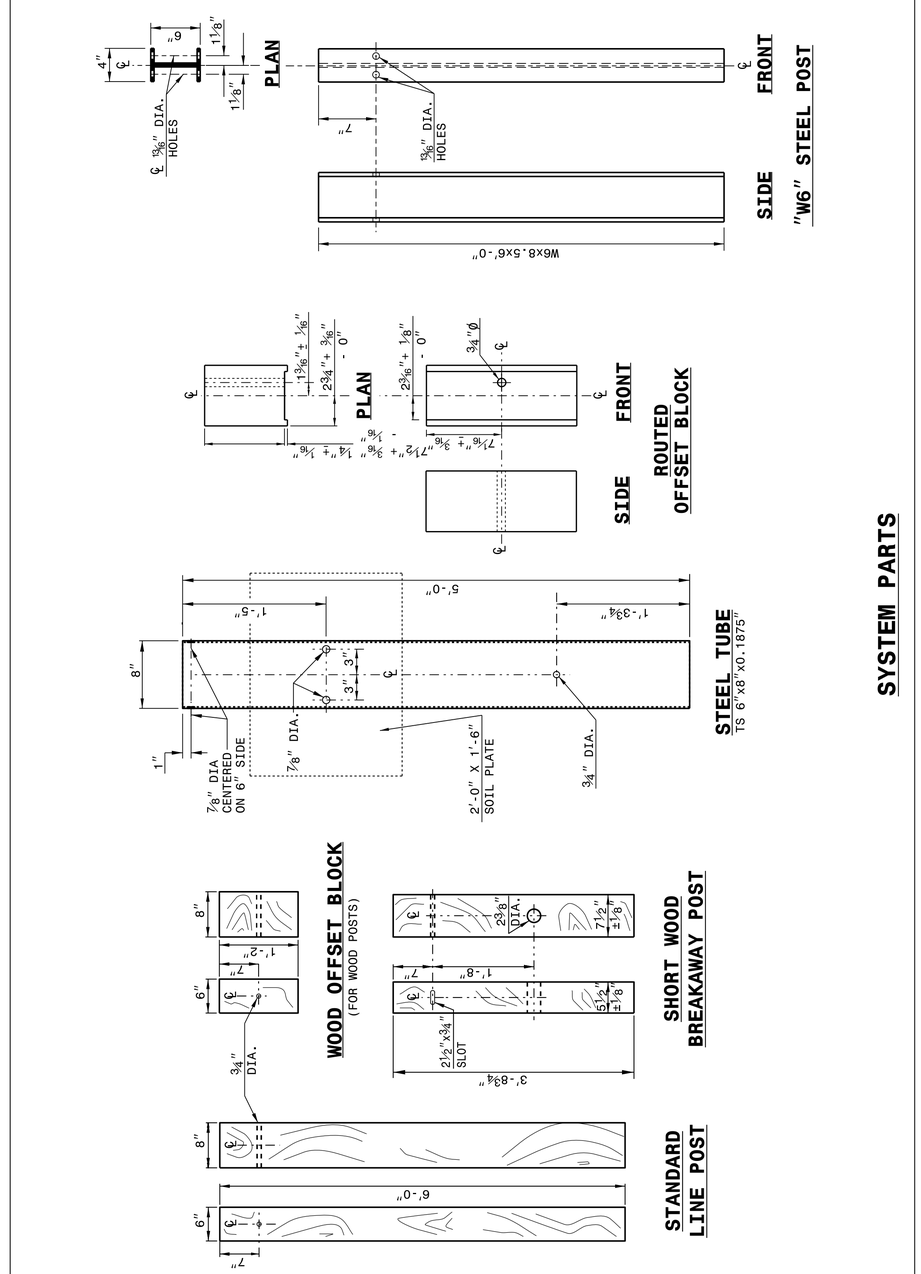

STATE OF NORTH CAROLINA DEPT. OF TRANSPORTATION DIVISION OF HIGHWAYS RALEIGH, N.C.

ROADWAY DETAIL DRAWING FOR
GUARDRAIL INSTALLATION

SHEET 6 OF 8
862D02

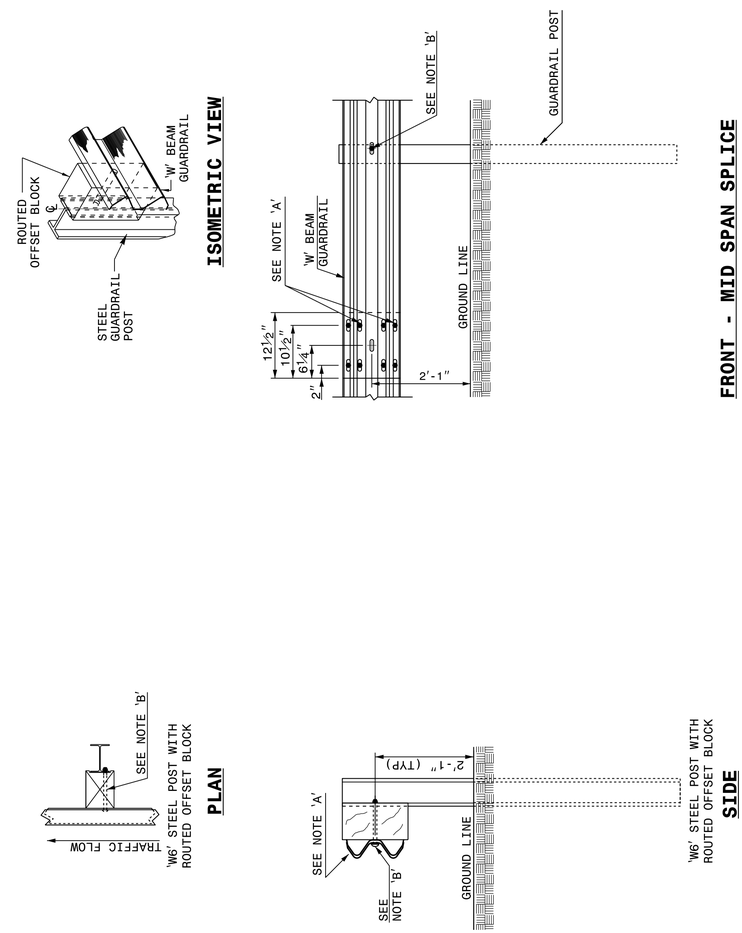

NOTES:
A - 5/8" DIA. BUTTON HEAD SPLICE BOLT 1 1/4" LONG (8 REQ. PER SPLICE JOINT).
B - 5/8" DIA. BUTTON HEAD BOLT 7 1/2"/9" LONG WITH NUT FOR BOLTING 6"/8" ROUTED OFFSET BLOCK TO STEEL POSTS.
C - FIELD PUNCHING OF HOLES INTO GUARDRAIL AS DIRECTED BY THE ENGINEER.

TYPICAL GUARDRAIL AND GUARDRAIL POST ALTERNATIVES

STATE OF NORTH CAROLINA DEPT. OF TRANSPORTATION DIVISION OF HIGHWAYS RALEIGH, N.C.

ROADWAY DETAIL DRAWING FOR
GUARDRAIL INSTALLATION

SHEET 5 OF 8
862D02

NORTH CAROLINA PROFESSIONAL SEAL ENGINEER
Michael S. Hoverton
Digitally signed by SEAL
11/6/2017

DOCUMENT NOT CONSIDERED FINAL UNLESS ALL SIGNATURES COMPLETED

CONTRACT STANDARDS AND DEVELOPMENT UNIT
Office 919-707-6950 FAX 919-250-4119

SEE TITLE BLOCK

ORIGINAL BY: J HOWERTON DATE: 06-22-12
MODIFIED BY: DATE:
CHECKED BY: DATE:
FILE SPEC.:

STATE OF NORTH CAROLINA DEPT. OF TRANSPORTATION DIVISION OF HIGHWAYS RALEIGH, N.C.

ROADWAY DETAIL DRAWING FOR
GUARDRAIL INSTALLATION

SHEET 6 OF 8
862D02

04-MAY-2017 15:20
S:\Contracts\Contracts\Special Details\jhowerton\Standard Drawings\2012 Standard Drawings\Details in Lieu of Standards\Division 8\862d01 862d03 862d03\862d02.dgn
jhowerton AT CSD-29295